The structural design and control system of autom labeling machines

подробное описание :

In the last article, we introduced the functions and needs that need to be met by automatic labeling r
Next, we talk about the structural design and control system of automatic labeling machines.
With the advantages of fast labeling speed and accurate label orientation, automatic labeling machin been widely used in the packaging, food industry, and chemical industry.

Labeling machine overall structure design

A labeling machine is a specific type of automatic work machine. It has the basic commonality of the a automatic work machine. The labeling machine in the structure includes four major parts, respectivel elements, work mechanism, transmission mechanism, and automatic control device system. At the sa time, the labeling machine also has some of its characteristics. According to the labeling machine pro structure of the labeling machine can be divided into the following six parts, each sub-part to comple respective functions and coordinate their work to achieve the labeling machine function.

1. Specialized agencies used for labeling. The auxiliary operating agencies include carton conveying d labeling material conveying device and finished product taking out agency, and the process operating agencies include labeling agency and stroking agency.
2. the control device adopts PLC control technology. The movement of each executive element in the is sequential action, requiring the control device can complete the sequential control of each motor. A same time, the electrical circuitry requires easy wiring, high reliability, and a low failure rate.
3. The carton conveying device conveys individual cartons along the movement route, using servo mo drive and belts as transmission tools.
4. The label conveyor is used to transport labels on rolls, transported to a specified position using a s motor pulling the label belt. The label can be automatically peeled off the label paper tape on the mo passes through the peel-off plate, while the label paper tape requires to be recycled after the label ha applied.
5. The labeling mechanism is the process operating mechanism of the labeling machine. Its main fun fix the peeled-out leading edge of the label on the carton. The labeling head is automatically retracte the labeling is completed.
6. The smoothing and pressing mechanism is also the process operating mechanism of the labeling r As the labeling machine adopts the "brushing method" for labeling, the remaining part of the label ne

be smoothed and compacted on the carton using a roller or brush after the peeled-off leading edge o
label is stuck on the carton.

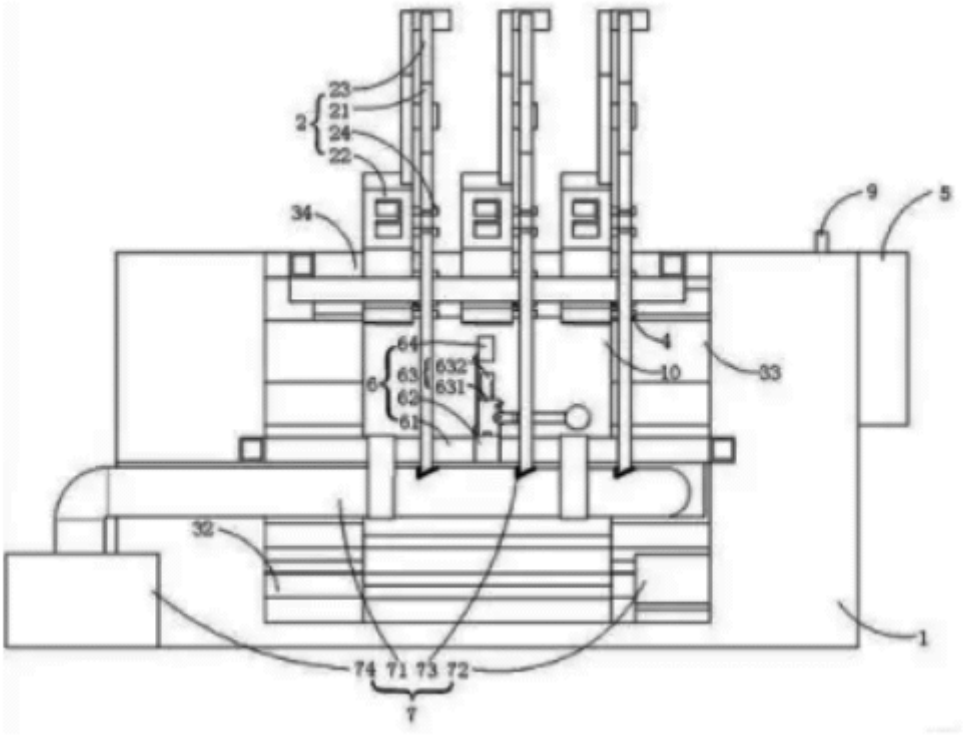

How do the label feeder and labeling mechanism work?

The label feeder and labeling mechanism are made up of 5 components.
1. The label roll support shaft is used to support the label roll so that the roll can be loosened into a b
within a certain traction range.
2. Traction wheels are used to pull the label tape and move the label a specified distance.
3. The guide rollers are used to support, guide, steer and correct the label tape. 4.
4. The role of the peeling bar is to enable the label to overcome the adhesion force between the self-
label and the label paper belt during the conveying process and to complete the automatic peeling of
label.
5. The label recovery wheel recovers the label tape in a roll while the traction wheel feeds the label.
The label on the tape is stiff and does not easily turn sharply along the peel bar as it passes over the
So when the tape's backing makes a sharp turn, the label continues to move forward due to inertia a
separates from the backing. It will follow the trend and stick to the box in place, then enter the stroki
mechanism with the box for rolling and firmly stick to the box. The rotating paper belt recycling whee
the backing paper.

The roller press has a smooth action to prevent the label from being scratched. It uses bearing suppo the power of the carton collision to drive, rather than another motor to drive, so greatly saving costs.

Labeling machine control system

The control structure of the labeling machine is divided into five parts as follows.
1. the production line will be labeled items to be transferred to the labeling machine conveyor belt, c belt servo motor to control the speed of the conveyor belt and start and stop, in the role of the conve the goods automatically to the labeling position transmission.
2. Under the action of the bottle divider motor, the bottle divider wheel rotates at a certain speed, pu items to be labeled a certain distance apart. When the object sensor detects that the item to be label place, a signal is fed back to the PLC, which processes the signal and sends out a control signal to cor servo motor of the drive roller that pulls the backing paper sends out the label.
3. After the label is attached to the item. It is firmly attached to the workpiece after being tightly press the stroking mechanism.
4. The label sensor detects the gap between the two labels and sends a signal to the PLC to stop the r of the servo motor, ending the labeling process.
5. The next item is passed to the labeling position, and the above action is repeated to complete the continuous labeling process.
In addition, to facilitate the operation, the system's human-machine interface is controlled by a touch

System commissioning

After the mechanical assembly of the labeling machine, the installation of motors and sensors, and th connection of the PLC control circuit, extensive system commissioning is carried out. For example, ch whether the position of the sensors is optimal, adjusting the speed of each drive element, and the coordination of each actuating element.
After continuous debugging, the frequent problems of punching, pulling, box jamming, slipping, scrat off-positioning, stopping, bubbles, and folds are effectively solved, further improving the design of th and enhancing its overall performance.

The above are all the basic content of the automatic labeling machine we are going to introduce. If yo interested in Shanghai Han Yi's labeling machine, please browse our product page. I believe there is a one suitable for you.