Customized Solution- Line Combiner and Automat

Bottom Surface Labeling Machine with Printer

Introducción detallada :

Part 1 - Customized Line Combiner

Part 2 - Automatic Bottom Surface Labeling Machine with Printer

Part 1 - Customized Line Combiner

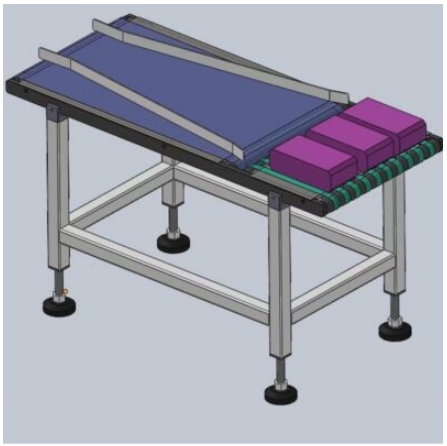

At the front end of the line combiner, the speed of the motors for the three lines can be adjusted (the knob adjusts the speed, and the speed of each line is different), and the three lines of products are co into one line at the rear end of the line combiner.

The line combiner is electrically controlled, all stainless steel frame.

Dimension(L* W* H):1040.80 * 432* 600mm,customizable.

Part 2 - Automatic Bottom Surface Labeling Machine with Printer

The machine picture is for reference only.

Brief Introduction

1.This labeling machine can automatically peel off the self-adhesive label from the backing paper and the label to the bottom surface of the product.

2.Integral design, which can be used as a stand-alone machine or integrated to the customer's produ line. The installation and integrated production line are flexible.

3.Equipped with an automatic conveying line and an automatic labeling machine, which automatically the object to be labeled after the label is output, and at the same time, the label is brushed firmly by labeling mechanism.

4.Equipped with PLC control system and HMI display for program control, operation and display infor of the entire machine.

5.The label of the device is pre-printed, and the label roll can be directly installed on the label tray of labeling machine for use.

6.The labeling machine is an industrial-grade design that can support the production line to work 24 day.

Machine drawing

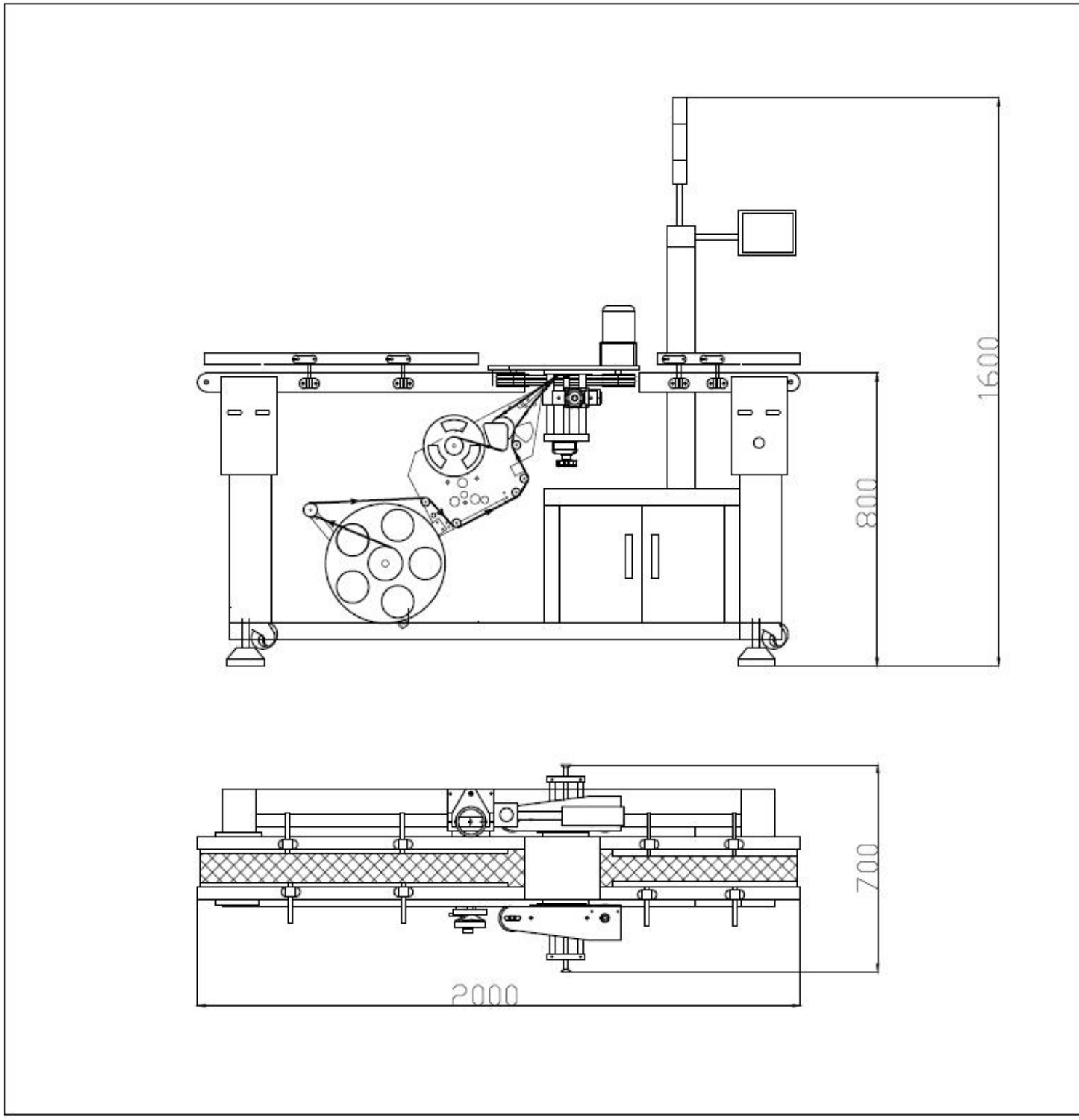

Main Features

1. Wide application scope. For products such as plastic trays and square boxes, the guardrails and cla mechanisms of the labeling machine can be adjusted at will. Other products that are not within the s be customized according to customer samples.

2. Main components: machine chassis, labeling engine, adjustment device, conveyor belt, touch scree indicator light and PLC control system.

3. Machine material: The body and parts are made of S304 stainless steel and high-grade aluminum a two surface treatments, which will never rust and have high corrosion resistance.

4. Labeling control system: German Siemens PLC and servo/step-in labeling system are adopted, with marking speed, high precision and stable work; multi-functional operation interface, flexible conversi between Chinese and English interfaces, system functions can be expanded and inserted, greater flex visual monitoring of production counting, parameter adjustment, etc., with rich help functions and fa display functions.

5. Label inspection system: Ultrasonic photoelectric sensor is used, which can detect non-transparen transparent labels, automatically detect the stop position and label length, stable and convenient, on setting without adjustment.

6. Alarm function: When the missing label, broken label and other machine encounter any failure dur production process, it will alarm and stop, and the alarm method can be selected.

7. Optional device: Equipped with a small cylinder-type brush labeler, which can flexibly solve the irre surface labeling of products, and the labeling accuracy is high.

8. Optional device: flexibly cooperate with thermal transfer printers, pneumatic coding machines, las machines and other machine to realize the coding function of different information on labels.

9. The operation and maintenance are simple, and the machine can be operated and maintained independently by simple training.

10. Small structure, small footprint, easy to move and install.

11. It can save 2-3 labor for the user.

Technical parameters

Labeling speed	3000-5000pcs/hour (Depending on the actual products)
Label accuracy	±1mm (excluding product and label errors)
Label material	Self-adhesive labels of any materials
Method of labeling	Rolling method
Label roll dimensions	internal diameter 76 mm, external 300 mm
Voltage	Single phase 220V 50HZ
Machine overall size (L*W*H)	2000*700*1600mm
Machine weight	About 150KG

Label technical parameters

1. The equipment should use machine-use roll-shaped self-adhesive labels.

2. The self-adhesive label is a composite material with paper, film or special material as the fabric, ad coated on the back, and silicon-coated paper as the protective paper. After printing, die cutting, etc., becomes a finished label. When in use, it only needs to be peeled off from the bottom paper, and it c applied to the surface of various substrates with a light press. It can also be used for automatic labeli production line with a labeling machine.

3. Requirements of the label roll: the inner diameter of the core is 76mm±0.5mm, the thickness and r of the core are moderate, and it should not be soft or thin, which is prone to deformation, and the he the core should be within the range of ±5mm of the label height, and the outer diameter should not b

greater than 300mm .

4. Cutting requirements: The label needs to be cut flat and not cut to the label content. The bottom p the label should not be cut too deep, and the bottom paper must not have obvious cut marks.

5. Spacing and level requirements: the spacing between label sheets should not be less than 3mm (pr 3-5mm), and the label arrangement should be on the same horizontal surface, and the upper and lov between the label and the bottom paper should be kept 1-1.5mm.

6. Label size: According to the label provided by the customer.

7. Label printing method: The label is printed in advance.

Main components configuration

No.	Components Name	Brand	QTY
1	PLC programmable controller	Siemens	1
2	Man-machine interface	Siemens	1
3	Printer	Zebra	1
4	Fiber Optic Sensor	Japan KEYENCE	1
5	Inspection sensor	Germany LEUZE	1
6	Servo motor	Taiwan YAKO	1
7	Driver	Taiwan YAKO	1
8	Conveying motor	JSCC	1
9	Amplifier	Japan KEYENCE	1
10	Inverter	Taiwan DELTA	1
11	Switching power supply	Taiwan DELTA	1
12	Low voltage electrical	Schneider	1